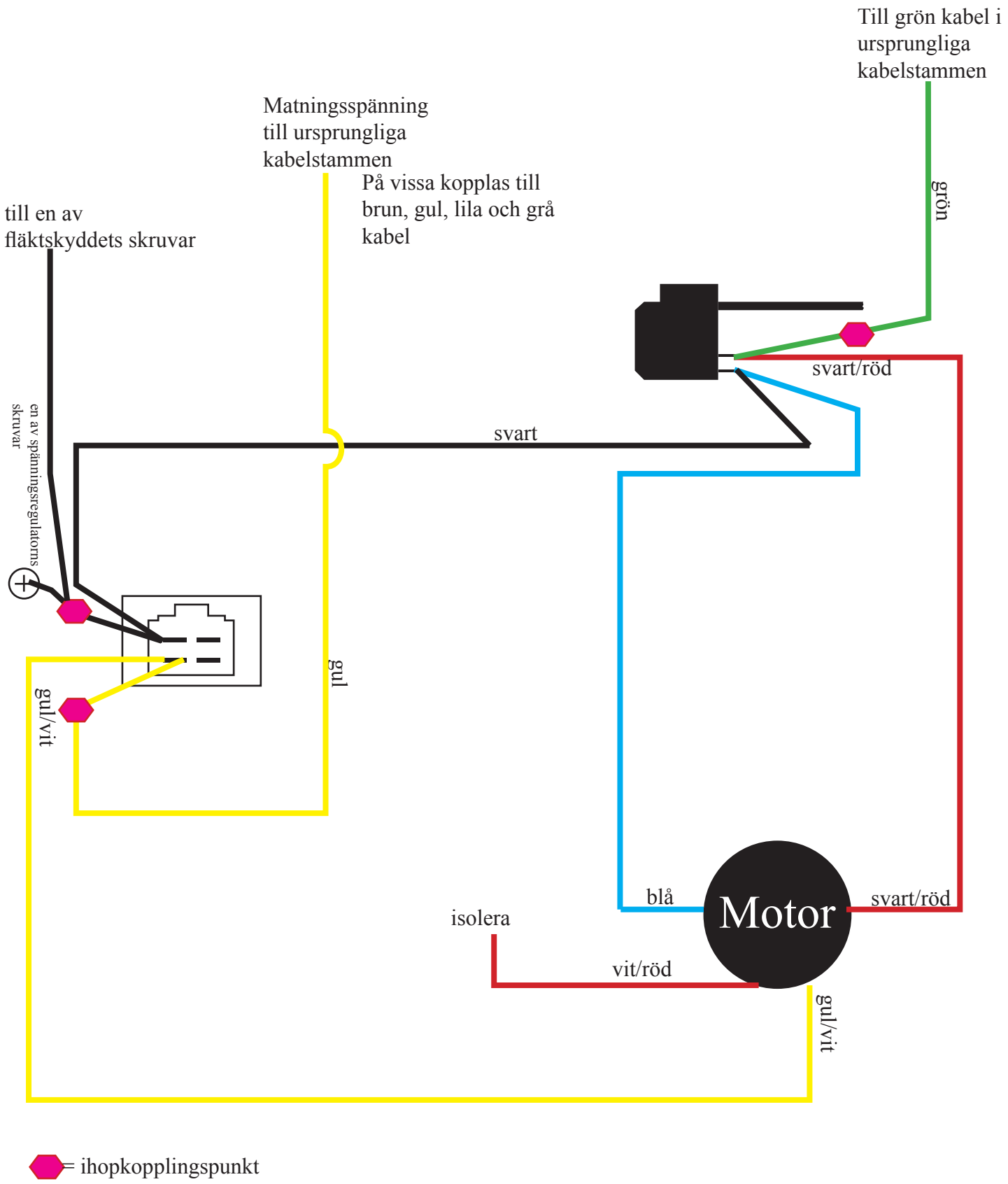

= ihopkopplingspunkt

© scootercity.tk